Summary in Graph

Exam Summary (GO Classes CS 2026 | All India Mock Test 5 (Set 1))

Qs. Attempted:	1 (0 + 1)	Correct Marks:	2 (0 + 2)
Correct Attempts:	1 (0 + 1)	Penalty Marks:	0 (0 + 0)
Incorrect Attempts:	0 (0 + 0)	Resultant Marks:	2 (0 + 2)

Total Questions:	65 (30 + 35)
Total Marks:	100 (30 + 70)
Exam Duration:	180 Minutes
Time Taken:	0 Minutes

Individual Question Statistics

Select Metric: Marks Obtained

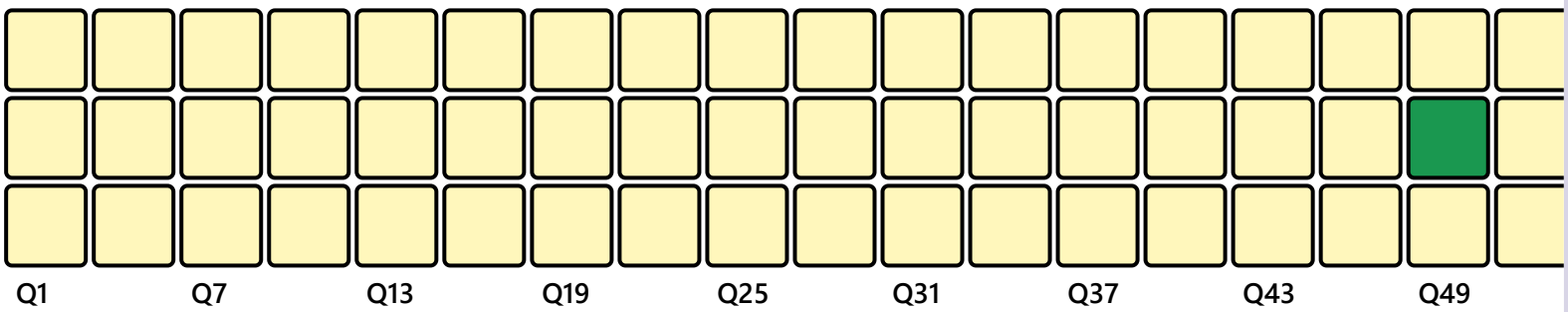

* Average Stats based on first-attempt stats of Top 10% (114) out of 1139 users

EXAM RESPONSE | EXAM STATS | FEEDBACK

Aptitude

Q #1 | Multiple Choice Type | Award: 1 | Penalty: 0.33 | Quantitative Aptitude

If $a^x = b^y$, then which of the following is correct?

A. $\log(a) + \log(b) = y/x$
B. $\log(a) - \log(b) = y/x$
C. $\log(a/b) = y/x$

D. $\log(a)/\log(b) = y/x$

Your Answer: | Correct Answer: D | Not Attempted | Time taken: 00min 00sec | Discuss

Q #2 | Multiple Choice Type | Award: 1 | Penalty: 0.33 | Quantitative Aptitude

If the length of each side of a square is increased by 50%, what is the percent increase in area of the new square?

A. 50%

B. 125%

C. 250%

D. 500%

Your Answer: | Correct Answer: B | Not Attempted | Time taken: 00min 00sec | Discuss

Q #3 | Multiple Choice Type | Award: 1 | Penalty: 0.33 | Analytical Aptitude

A tells only lies on Monday, Tuesday and Wednesday and speaks only the truth for the rest of the week. B tells only lies on Thursday, Friday and Saturday and speaks only the truth for the rest of the week. If today both of them state that they have lied yesterday, what is it today?

A. Monday

B. Thursday

C. Sunday

D. Tuesday

Your Answer: | Correct Answer: B | Not Attempted | Time taken: 00min 07sec | Discuss

Q #4 | Multiple Choice Type | Award: 1 | Penalty: 0.33 | Quantitative Aptitude

The Cayley Corner Store sells three types of toys: Exes, Wyes and Zeds. All Exes are identical, all Wyes are identical, and all Zeds are identical. The mass of 2 Exes equals the mass of 29 Wyes. The mass of 1 Zed equals the mass of 16 Exes. The mass of 1 Zed equals the mass of how many Wyes?

A. 3.625

B. 1.103

C. 232

D. 464

Your Answer: | Correct Answer: C | Not Attempted | Time taken: 00min 00sec | Discuss

Q #5 | Multiple Choice Type | Award: 1 | Penalty: 0.33 | Quantitative Aptitude

A sign has 31 spaces on a single line.

The word $\mathrm{RHOMBUS}$ is written from left to right in 7 consecutive spaces.

There is an equal number of empty spaces on each side of the word.

Counting from the left, in what space number should the letter R be put?

A. 12

B. 13

C. 14

D. 15

Your Answer: | Correct Answer: B | Not Attempted | Time taken: 00min 00sec | Discuss

Q #6 | Multiple Choice Type | Award: 2 | Penalty: 0.67 | Quantitative Aptitude

A milkman adds 10 litres of water to 90 litres of milk. After selling $1/5^{\text{th}}$ of the total quantity, he adds water equal to the quantity he has sold. The proportion of water to milk he sells now would be

A. $72 : 28$

B. $28 : 72$

C. $20 : 80$

D. $30 : 70$

Your Answer: | Correct Answer: B | Not Attempted | Time taken: 00min 00sec | Discuss

Q #7 | Multiple Choice Type | Award: 2 | Penalty: 0.67 | Quantitative Aptitude

Twelve lightbulbs are in a row. All lightbulbs are initially turned off. Angie flips the switch for every 2nd lightbulb. Then Bilal flips the switch for every 3rd lightbulb. Finally, Chenxhui flips the switch for every 4th lightbulb. At the end of this process, how many lightbulbs are turned on?

A. 5

B. 6

C. 7

D. 8

Your Answer: | Correct Answer: A | Not Attempted | Time taken: 00min 00sec | Discuss

Q #8 | Multiple Choice Type | Award: 2 | Penalty: 0.67 | Verbal Aptitude

Choose the most correct combination of words to fill in the blanks in the sentence below:

The coach scolded his team, saying, "You _____ when your defence becomes _____ ".

A. loose/loose

B. loose/lose

C. lose/loose

D. lose/lose

Your Answer: | Correct Answer: C | Not Attempted | Time taken: 00min 00sec | Discuss

Q #9 | Multiple Choice Type | Award: 2 | Penalty: 0.67 | Spatial Aptitude

A three-dimensional view of a solid is sketched below.

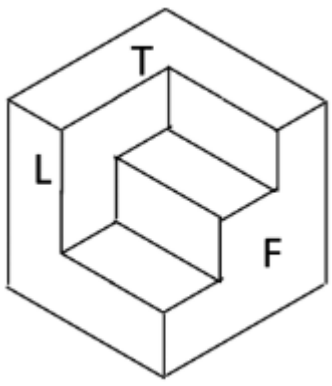

The three projections below are each intended to show the solid from its front (F), left side (L) and top (T), as marked in the figure. Which one is correct?

A.
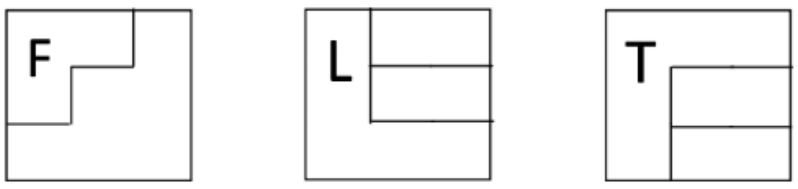

B.
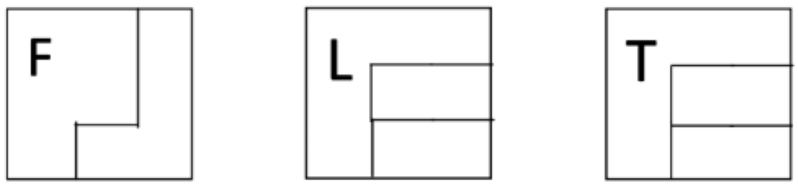

C.
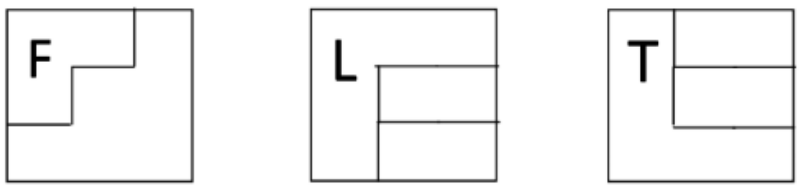

D.
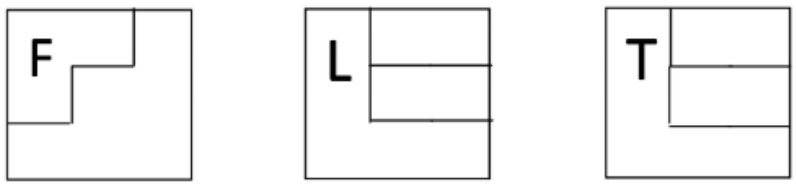

Your Answer: | Correct Answer: A | Not Attempted | Time taken: 00min 00sec | Discuss

Q #10 | Multiple Choice Type | Award: 2 | Penalty: 0.67 | Analytical Aptitude

In a football tournament of repeated games between two teams, team A scored more goals while team B won more games. What can you conclude?

A. Team B won more games in the first half of the tournament

B. Team B scored more goals first half of the tournament

C. Team A had larger goal victory margins in the games they won

D. Team B had larger goal victory margins in the games they won

Your Answer: | Correct Answer: C | Not Attempted | Time taken: 00min 00sec | Discuss

Technical

Q #1 | Multiple Choice Type | Award: 1 | Penalty: 0.33 | Theory of Computation

Which of the following statements is/are true?

A. Deterministic and non-deterministic PDA's have equivalent expressive power.

B. An NFA can recognize any language that a PDA can recognize.

C. The language 0^n0^n is regular.

D. For any CFG G , if a string is in $L(G)$ then it corresponds to exactly one parse tree.

Your Answer: | Correct Answer: C | Not Attempted | Time taken: 00min 00sec | Discuss

Q #2 | Multiple Choice Type | Award: 1 | Penalty: 0.33 | Digital Logic

Which one of the following expressions is the correct logic statement for $X(A, B, C)$ described by the truth table shown below.

A	B	C	X
0	0	0	1
0	0	1	0
0	1	0	0
0	1	1	0
1	0	0	0
1	0	1	0
1	1	0	1
1	1	1	0

A. NOT (A AND B AND C)

B. (A XOR B) NOR C

C. (A OR B OR C) NOR C

D. NOT A AND NOT B AND NOT C

Your Answer: | Correct Answer: B | Not Attempted | Time taken: 00min 00sec | Discuss

Q #3 Multiple Choice Type Award: 1 Penalty: 0.33 Digital Logic

A table contains 287 entries. When any one of the entries is requested, it is encoded into a binary string and transmitted. The number of bits required is.

A. 8

B. 9

C. 10

D. Cannot be determined from the given information.

Your Answer: Correct Answer: D Not Attempted Time taken: 00min 00sec Discuss

Q #4 Multiple Choice Type Award: 1 Penalty: 0.33 Digital Logic

Addressing of a $32K \times 16$ memory is realized using a single decoder. The minimum number of AND gates required for the decoder is

A. 2^8

B. 2^{32}

C. 2^{15}

D. 2^{19}

Your Answer: Correct Answer: C Not Attempted Time taken: 00min 00sec Discuss

Q #5 Numerical Type Award: 1 Penalty: 0 Databases

How many blocks are on a disk with the following characteristics? Sector size of 512 bytes, 16 sectors per track, 16384 tracks per surface, 4 double sided platter, and 4096 bytes per block.

Your Answer: Correct Answer: 262144 Not Attempted Time taken: 00min 00sec Discuss

Q #6 Multiple Choice Type Award: 1 Penalty: 0.33 Databases

Consider that a designer wants to index a file that contains records with different numerical attributes. He wants to be able to perform efficient searches on records based on exact values $(\text{e.g., } 10)$, as well as on ranges of values $(\text{e.g., between } 10 \text{ and } 20)$. Which indexing structure would be the most appropriate?

A. B+ tree

B. B tree

C. Binary search tree

D. AVL tree

Your Answer: Correct Answer: A Not Attempted Time taken: 00min 00sec Discuss

Q #7 Numerical Type Award: 1 Penalty: 0 Databases

Draw the precedence graph for the schedule of transactions X, Y, and Z shown below.

X	Y	Z
Read (A) Write (B)		
	Read (C) Write (A) Write (C) Commit	
Read (B) Write (A) Commit		
		Write (A) Commit

↓ time

The number of edges in the precedence graph is ?

Your Answer: Correct Answer: 4 Not Attempted Time taken: 00min 00sec Discuss

Q #8 Multiple Choice Type Award: 1 Penalty: 0.33 Set Theory & Algebra

If A and B are two finite sets, perform the reduction of E.

$$E = \{ A \cap (A \cup B') \} - B'.$$

A. A

B. B

C. $A \cap B$

D. $A \cup B$

Your Answer: Correct Answer: C Not Attempted Time taken: 00min 00sec Discuss

Q #9 Multiple Choice Type Award: 1 Penalty: 0.33 Mathematical Logic

Given the statement:

"Exactly one person between Marcos and Heide traveled."

The negation of the above statement is logically equivalent to:

A. Both traveled.

B. None of them traveled.

C. Marcos or Heide did not travel.

D. Both traveled or neither traveled.

Your Answer: | Correct Answer: D | Not Attempted | Time taken: 00min 00sec | Discuss

Q #10 | Multiple Select Type | Award: 1 | Penalty: 0 | Operating System

Monty Mole and Rocky Wrench disagree about the best page replacement policies for demand paging. Assume that the system has three page frames of physical memory (frames 1–3), and the program uses four pages of virtual memory (A, B, C, D). Virtual memory accesses are written as a comma-separated list (e.g., A, B, C, D, A).

Monty Mole is convinced that the best page replacement policy for demand paging is MRU (Most Recently Used). The first two page accesses are fixed and are shown below.

Frame	Access A	Access B
1	A	
2		B
3		

Under the MRU page replacement policy, the most recently accessed page is selected for eviction on a page fault.

Which of the following sequences of six additional page accesses, when appended after the initial accesses A, B, will cause every one of these six accesses to result in a page fault under the MRU page replacement policy?

Select all options that are correct.

A. C, D, C, D, C, D
B. A, B, C, D, A, B
C. C, D, A, B, C, D
D. D, C, D, C, D, C

Your Answer: | Correct Answer: A;D | Not Attempted | Time taken: 00min 00sec | Discuss

Q #11 | Multiple Select Type | Award: 1 | Penalty: 0 | Operating System

Which of the following descriptions of Banker's Algorithm are correct?

A. Banker's Algorithm is used in deadlock recovery.

B. Banker's Algorithm can be used to determine whether or not a system is guaranteed to deadlock.

C. Using Banker's Algorithm results in an execution that is guaranteed to avoid deadlock.

D. Banker's Algorithm relies on having known upper limits for resource requests per thread.

Your Answer: | Correct Answer: C;D | Not Attempted | Time taken: 00min 00sec | Discuss

Q #12 | Multiple Choice Type | Award: 1 | Penalty: 0.33 | Operating System

Two processes execute concurrently on a single processor. Their behaviors are described below.

Process P_1 starts execution first. A process that is sleeping is not runnable and therefore does not consume any CPU time. Whenever one process is sleeping, the other ready process immediately gets the processor.

The scheduler's time quantum has no effect on the final timing.

The code executed by the two processes is shown below:

Process 1	Process 2

`for i = 1 to N:`
`  sleep for C time units`
`  compute for 2C time units`
	`for i = 1 to N:`
	`  compute for C time units`
	`  sleep for C time units`

At what time, in terms of N and C, have **both** processes completed execution?

A. $(N+1)C$
B. $3NC$
C. $2NC+C$
D. $3NC+C$

Your Answer: | Correct Answer: B | Not Attempted | Time taken: 00min 00sec | Discuss

Q #13 Multiple Choice Type | Award: 1 | Penalty: 0.33 | Programming in C

Consider the following declaration: `int (*A)[20];` If `A` points to the memory location x, which memory location does $A+1$ point to? Assume that `sizeof(int)` $= 4$.

A. $x+80$
B. $x+20$
C. $x+4$
D. Does not depend on x

Your Answer: | Correct Answer: A | Not Attempted | Time taken: 00min 00sec | Discuss

Q #14 Numerical Type | Award: 1 | Penalty: 0 | Programming in C

Consider the following recursive function written in C.

What value is returned by the call `f(1)`?

```
int f (int n)
{
  static int i = 1;
  if (n >= 5) return n;
  n = n + i;
  i++;
  return f(n);
}
```

Your Answer: | Correct Answer: 7 | Not Attempted | Time taken: 00min 00sec | Discuss

Q #15 Multiple Choice Type | Award: 1 | Penalty: 0.33 | Data Structures

Let `L(u)` denote the number of leaf nodes in a binary tree rooted at `u`. Assume that the function `leaf(u)` returns 1 if `u` is a leaf node, and 0 otherwise.

Which of the following relations can be used to recursively compute `L(u)`?

A. `L(u)` $=$ `L(u->left)` $+$ `L(u->right)`

B. $\texttt{L(u)} = \texttt{L(u->left)} + \texttt{L(u->right)} + 1$

C. $\texttt{L(u)} = \texttt{L(u->left)} + \texttt{L(u->right)} + \texttt{leaf(u)}$

D. $\texttt{L(u)} = \texttt{L(u->left)} + \texttt{L(u->right)} + \texttt{leaf(u)} + 1$

Your Answer: | Correct Answer: C | Not Attempted | Time taken: 00min 00sec | Discuss

Q #16 | Multiple Choice Type | Award: 1 | Penalty: 0.33 | Data Structures

The binary search tree shown below was constructed by inserting a sequence of items into an empty tree

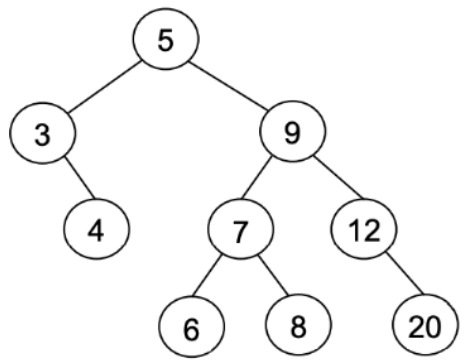

Which of the following input sequences will not produce this binary search tree?

A. 5
3
4
9
12
7
8
6
20

B. 5
9
3
7
6
8
4
12
20

C. 5
9
7
8
6
12
20
3
4

D. 5
9
3
6
7
8
4
12
20

Your Answer: | Correct Answer: D | Not Attempted | Time taken: 00min 00sec | Discuss

Q #17 Multiple Choice Type | Award: 1 | Penalty: 0.33 | Data Structures

Consider the following min-binary heap shown in the image below.

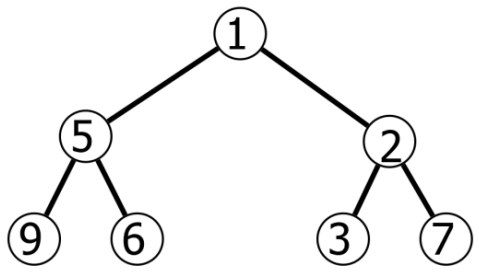

The following operations are performed on the heap in the given order:

$$\texttt{Insert(4)}, \quad \texttt{DeleteMin}, \quad \texttt{DecreaseKey}(7 \rightarrow 0)$$

Assume that new nodes are inserted at the leftmost available position and standard min-heap rules are followed.

After all operations are completed, which of the following keys is the left child of the root in the final heap?

A. 2

B. 4

C. 5

D. 6

Your Answer: | Correct Answer: B | Not Attempted | Time taken: 00min 00sec | Discuss

Q #18 Multiple Select Type | Award: 1 | Penalty: 0 | Data Structures

A linear-probing hash table of length 10 uses the hash function $\mathrm{h(k)} = \mathrm{k} \bmod 10$ to hash integer keys between 0 and 100 . After inserting 8 keys into an empty hash table, the table is as shown below.

0	1	2	3	4	5	6	7	8	9
19	91	21	93	74	2		77		89

Which of the following choices gives a possible order in which the keys could have been inserted into an initially empty hash table? Assume that the initial length of the array is 10 and that it neither grows nor shrinks.

A. $19, 91, 21, 93, 77, 89, 74, 2$

B. $77, 89, 19, 93, 91, 74, 21, 2$

C. $89, 19, 93, 91, 74, 21, 2, 77$

D. $91, 77, 93, 21, 89, 74, 2, 19$

Your Answer: | Correct Answer: B;C;D | Not Attempted | Time taken: 00min 00sec | Discuss

Q #19 Multiple Choice Type | Award: 1 | Penalty: 0.33 | Algorithms

Consider the following diagram, which shows an intermediate step of building up a minimum spanning tree (MST). Thick, solid, red edges indicate edges that have been selected for the MST so far, and thin, dashed, blue edges indicate edges that have not.

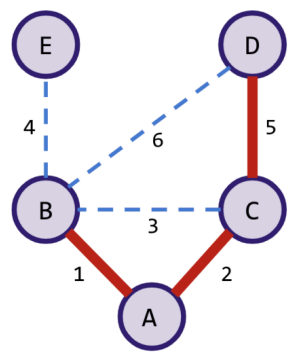

Which of the following algorithms could this be an intermediate step of? Select all that apply.

A. Prim's algorithm starting from A

B. Prim's algorithm starting from C

C. Prim's algorithm starting from D

D. Kruskal's algorithm

Your Answer: | Correct Answer: C | Not Attempted | Time taken: 00min 00sec | Discuss

Q #20 Multiple Choice Type | Award: 1 | Penalty: 0.33 | Algorithms

Consider the recurrence relation: $T(n) = 1.999 \cdot T(n/2) + n$. Which of the following statements is **TRUE**?

A. $T(n) \in o(n)$

B. $T(n) \in \Theta(n)$

C. $T(n) \in \Theta(n \log n)$

D. $T(n) \in \omega(n \log n)$

Your Answer: | Correct Answer: B | Not Attempted | Time taken: 00min 00sec | Discuss

Q #21 Multiple Choice Type | Award: 1 | Penalty: 0.33 | Algorithms

Rank the following functions in **increasing order of growth**.

That is, find an arrangement g_1, g_2, g_3, g_4 such that

$$g_1 = O(g_2), \quad g_2 = O(g_3), \quad g_3 = O(g_4).$$

The functions are:

$$f_1 = n^{\log n}, \qquad f_2 = \sqrt{n}, \qquad f_3 = n^{3+\sin n}, \qquad f_4 = \log n^n$$

Which of the following is the correct increasing order of growth?

A. f_2, f_4, f_3, f_1

B. f_4, f_2, f_3, f_1

C. f_2, f_3, f_4, f_1

D. f_4, f_3, f_2, f_1

Your Answer: | Correct Answer: A | Not Attempted | Time taken: 00min 00sec | Discuss

Q #22 | Multiple Choice Type | Award: 1 | Penalty: 0.33 | Linear Algebra

All the four entries of the 2×2 matrix $\mathbf{P} = \begin{bmatrix} p_{11} & p_{12} \\ p_{21} & p_{22} \end{bmatrix}$ are nonzero, and one of its eigenvalues is zero. Which of the following statements is true?

A. $p_{11}p_{22} - p_{12}p_{21} = 1$

B. $p_{11}p_{22} - p_{12}p_{21} = -1$

C. $p_{11}p_{22} - p_{12}p_{21} = 0$

D. $p_{11}p_{22} + p_{12}p_{21} = 0$

Your Answer: | Correct Answer: C | Not Attempted | Time taken: 00min 00sec | Discuss

Q #23 | Numerical Type | Award: 1 | Penalty: 0 | Computer Networks

Starting at $t = 0$, EvanBot sends payloads, one after the other, from H to T. Each payload is of size 20 Gbits. Node E must receive all bits of a payload before sending that payload along the next link. The network topology is $H \to E \to T$, with the following link characteristics:

	Link 1	Link 2
Propagation Delay	2 sec	10 sec
Bandwidth	20 Gbps	10 Gbps

At what time (in seconds) does node T receive the last bit of the first payload?

Your Answer: | Correct Answer: 15 | Not Attempted | Time taken: 00min 00sec | Discuss

Q #24 | Numerical Type | Award: 1 | Penalty: 0 | Computer Networks

Imagine a world having 4-bit IP addresses. Consider the routing table is given below.

IP Prefix	Output Port
00xx	Port 4
01xx	Port 3
010x	Port 5
0111	Port 9
11xx	Port 2
0000	Port 8

How many of the 16 possible 4-bit IP addresses are forwarded along the default route? Your answer should be a number between 0 and 16, inclusive.

Your Answer: | Correct Answer: 4 | Not Attempted | Time taken: 00min 00sec | Discuss

Q #25 | Multiple Choice Type | Award: 1 | Penalty: 0.33 | Computer Networks

A TCP packet has a value of 9 in its TCP header length field.

What is the size (in bytes) of the TCP options in this packet?

A. 9
B. 16
C. 20
D. 36

Your Answer: | Correct Answer: B | Not Attempted | Time taken: 00min 00sec | Discuss

Q #26 | Multiple Select Type | Award: 2 | Penalty: 0 | Theory of Computation

If L is a language, and "a" is a symbol, then L/a, the right-quotient of L and a, is the set of strings w such that wa is in L . For example, if

$$\mathrm{L} = \{\mathrm{a}, \mathrm{aab}, \mathrm{baa}\}, \text{then} \quad \mathrm{L}/\mathrm{a} = \{\varepsilon, \mathrm{ba}\}$$

If L is a language, and "a" is a symbol, then $\mathrm{a}\backslash\mathrm{L}$, the left-quotient of L and a, is the set of strings a such that aw is in L . For example, if $\mathrm{L} = \{\mathrm{a}, \mathrm{aab}, \mathrm{baa}\}$, then $\mathrm{a}\backslash\mathrm{L} = \{\varepsilon, \mathrm{ab}\}$.

Which of the following identities is/are true ?

A. $(\mathrm{L}/\mathrm{a})\mathrm{a} = \mathrm{L}$ (the left side represents the concatenation of the languages L/a and $\{\mathrm{a}\}$).

B. $\mathrm{a}(\mathrm{a}\backslash\mathrm{L}) = \mathrm{L}$ (again, concatenation with $\{\mathrm{a}\}$, this time on the left, is intended).

C. $(\mathrm{La})/\mathrm{a} = \mathrm{L}$.

D. $\mathrm{a}\backslash(\mathrm{aL}) = \mathrm{L}$.

Your Answer: | Correct Answer: C;D | Not Attempted | Time taken: 00min 00sec | Discuss

Q #27 | Numerical Type | Award: 2 | Penalty: 0 | Theory of Computation

Convention. When we use a diagram to depict a pda, we use our own private conventions. A single instruction (p, a, A, q, α) is given as an arc from state p to state q labelled by $a; A/\alpha$. Label $a; +A$ represents a set of instructions pushing A on top of the stack (p, a, X, q, AX) for all $X \in \Gamma$, while label a represents the set (p, a, X, q, X) of instructions that 'ignore' the stack.

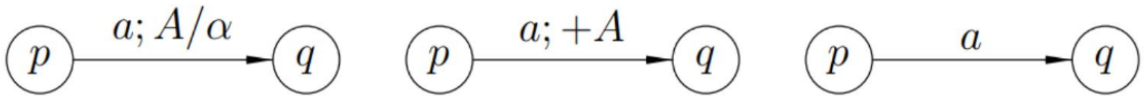

Consider the following pushdown automaton over the input alphabet $\Sigma = \{\mathrm{a}, \mathrm{b}\}$ and stack alphabet $\Gamma = \{\mathrm{Z_{in}}, \mathrm{A}\}$. Let $\mathrm{Z_{in}} \in \Gamma$ be the initial stack symbol.

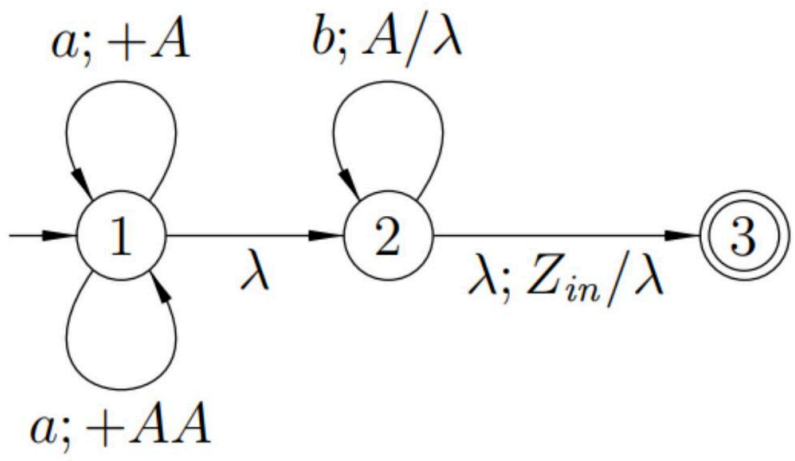

The number of strings of length 15 accepted by the above pushdown automaton is ? (Assume string acceptance by final state)

Your Answer: | Correct Answer: 3 | Not Attempted | Time taken: 00min 00sec | Discuss

Q #28 | Multiple Select Type | Award: 2 | Penalty: 0 | Theory of Computation

Consider the following mystery algorithm:

Input: TM $M_1 = (Q_1, \Sigma_1, \Gamma_1, \delta_1, s_1)$, TM $M_2 = (Q_2, \Sigma_2, \Gamma_2, \delta_2, s_2)$, where $Q_1 \cap Q_2 = \emptyset$

Output: TM $M = (\{\$\} \cup Q_1 \cup Q_2,\ \{0,1\} \cup \Sigma_1 \cup \Sigma_2,\ \{0,1\} \cup \Gamma_1 \cup \Gamma_2,\ \delta,\ \$)$

where

$$\delta(p, x) = \begin{cases} (s_1, x, R) & \text{if } p = \$ \text{ and } x = 0 \\ (s_2, x, R) & \text{if } p = \$ \text{ and } x = 1 \\ \delta_1(p, x) & \text{if } p \in Q_1 \text{ and } x \in \Sigma_1 \\ \delta_2(p, x) & \text{if } p \in Q_2 \text{ and } x \in \Sigma_2 \\ (p, x, S) & \text{otherwise} \end{cases}$$

S indicates stay i.e. the head stays on the same tape cell.

Given two Turing Machines (TMs) M_1 and M_2, this algorithm produces another Turing Machine M.

Which of the following statements are TRUE? (Choose all that apply.)

A. If M_1 and M_2 both halt on all inputs, then M halts on all inputs.

B. If M_1 or M_2 loop on some input, then M must loop on some input.

C. $L(M) = 0L(M_1) \cap 1L(M_2)$

D. If $w \in L(M_1)$, then $0w \in L(M)$, and if $w \in L(M_2)$, then $1w \in L(M)$

Your Answer: | Correct Answer: B;D | Not Attempted | Time taken: 00min 00sec | Discuss

Q #29 | Numerical Type | Award: 2 | Penalty: 0 | Theory of Computation

Let $S = \{\vdash, X\}$ be an alphabet of two symbols. The language $L \subseteq S^*$ is defined as follows:

i. $\vdash X \in L$;

ii. if $\vdash y \in L$ for some string $y \in S^*$, then also $\vdash yy \in L$;

iii. if $\vdash y \in L$ for some string $y \in S^*$, then also $\vdash yyy \in L$;

iv. if $\vdash yXXXXX \in L$ for some string $y \in S^*$, then also $\vdash y \in L$;

v. no other string $\in L$.

The number of states in a minimum state DFA for L is ?

Your Answer: | Correct Answer: 7 | Not Attempted | Time taken: 00min 00sec | Discuss

Q #30 | Multiple Choice Type | Award: 2 | Penalty: 0.67 | Digital Logic

The propagation delays of the XOR gate, AND gate and multiplexer (MUX) in the circuit shown in the figure are $4\ ns$, $2\ ns$ and $1\ ns$, respectively.

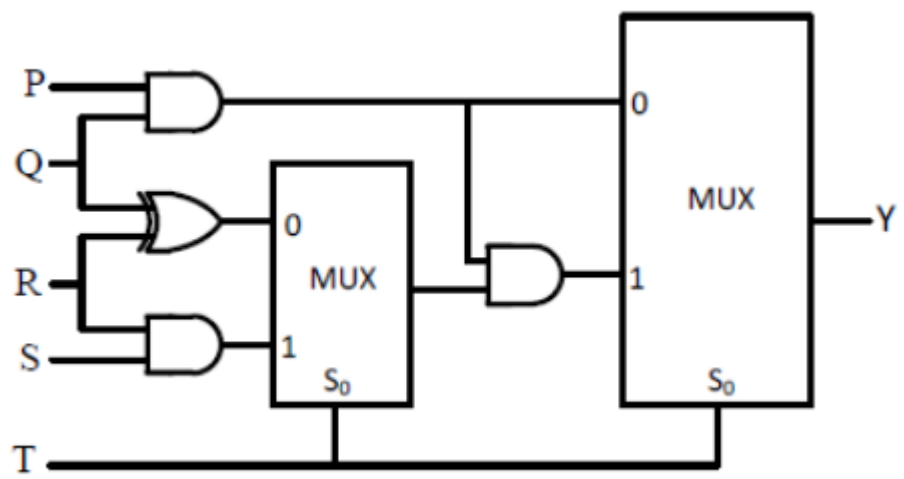

If all the inputs $\mathrm{P}, \mathrm{Q}, \mathrm{R}, \mathrm{S}$ and T are applied simultaneously and held constant, the maximum propagation delay of the circuit is

A. $3\ ns$

B. $5\ ns$

C. $6\ ns$

D. $7\ ns$

Your Answer: | Correct Answer: C | Not Attempted | Time taken: 00min 00sec | Discuss

Q #31 | Numerical Type | Award: 2 | Penalty: 0 | Digital Logic

A mod-n counter using a synchronous binary up-counter with synchronous clear input is shown in the figure. The value of n is _____.

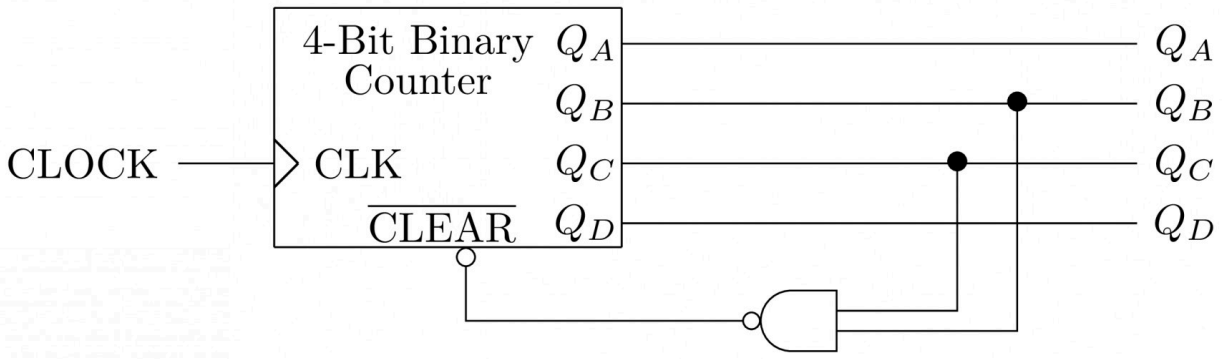

Your Answer: | Correct Answer: 7:7 | Not Attempted | Time taken: 00min 00sec | Discuss

Q #32 | Multiple Choice Type | Award: 2 | Penalty: 0.67 | Set Theory & Algebra

A partition of a set A is a set P of non-empty disjoint subsets of A such that $A = \bigcup P$.

i.e. a partition of a set A is a collection P of non-empty subsets of A such that every element of A is an element of exactly one of the subsets in P.

Let $g(n, r)$ be the number of partitions of a set A having n elements into r subsets, where $1 \leq r \leq n$.

For $1 < r < n$, which of the following recurrence relations is correct?

A. $g(n, r) = r\, g(n-1, r) + (r-1)\, g(n-1, r-1)$.

B. $g(n, r) = n\, g(n-1, r) + g(n-1, r-1)$.

C. $g(n, r) = r\, g(n-1, r) + g(n-1, r-1)$.

D. $g(n, r) = g(n-1, r) + r\, g(n-1, r-1)$.

Your Answer: | Correct Answer: C | Not Attempted | Time taken: 00min 00sec | Discuss

Q #33 | Numerical Type | Award: 2 | Penalty: 0 | Combinatory

A ternary string is a finite ordered sequence formed by one or more occurrences of the digits 0, 1, and 2. The length of a ternary string is the number of digits that compose it. For example, 20010 is a ternary string of length 5. A ternary string is called interesting if such a string, when read from left to right, does not contain the digit 0 occurring in any position to the right of a digit 1. For example, 0, 111, 22, and 020121 are interesting ternary strings. However, 1101, 211220, and 00012202 are not interesting ternary strings. How many interesting ternary strings of length 8 exist?

Your Answer: | Correct Answer: 1280 | Not Attempted | Time taken: 00min 00sec | Discuss

Q #34 | Multiple Choice Type | Award: 2 | Penalty: 0.67 | CO & Architecture

Assume a floating-point number format similar to IEEE-754 but consisting of only 8 bits, with 3 bits reserved for the exponent. If the exponent 000 leads to a true 0.0 value regardless of the significand, and the exponent 111 encodes infinity or a NaN value depending on the significand. What is the largest finite decimal value that can be encoded in the 8-bit floating point encoding?

A. 1.9375

B. 7.75

C. 15.5

D. 31.0

Your Answer: | Correct Answer: C | Not Attempted | Time taken: 00min 00sec | Discuss

Q #35 Multiple Choice Type | Award: 2 | Penalty: 0.67 | CO & Architecture

The unsigned integer $3{,}505{,}468{,}161$ can be written in 32-bit binary as

$$11010000\ 11110001\ 00110011\ 00000001.$$

Putting it into four bytes of memory beginning at address 98370 in **big-endian** fashion would give which picture?

A.

98370	98371	98372	98373
11010000	11110001	00110011	00000001

B.

98370	98371	98372	98373
00000001	11110001	00110011	11010000

C.

98370	98371	98372	98373
00000001	00110011	11110001	11010000

D.

98370	98371	98372	98373
00110011	00000001	11010000	11110001

Your Answer: | Correct Answer: A | Not Attempted | Time taken: 00min 00sec | Discuss

Q #36 Multiple Choice Type | Award: 2 | Penalty: 0.67 | Databases

Let $R = (A, B, C)$ and let r_1 and r_2 both be relations on schema R.

Consider the following SQL expression:

```
SELECT *
FROM r1
WHERE (A, B, C) IN
      ( SELECT * FROM r2 )
```

This SQL expression is equivalent to which of the following relational algebra expressions?

A. `r1 - r2`

B. `r1 ∩ r2`

C. `r1 ∪ r2`

D. `r2 - r1`

Your Answer: | Correct Answer: B | Not Attempted | Time taken: 00min 00sec | Discuss

Q #37 Numerical Type | Award: 2 | Penalty: 0 | Combinatory

11 children play a game. They stand in a circle, and one of them starts passing a ball to somebody else, who in turn passes it on to a third child, etc. The rules are the following: nobody can throw the ball to somebody he/she has thrown it before, also nobody can throw the ball to somebody who has thrown it to him/her before, and nobody can throw the ball to either of the two children standing next to him/her in the circle. At most how many passes are possible in the game under these rules?

Your Answer: | Correct Answer: 44 | Not Attempted | Time taken: 00min 00sec | Discuss

Q #38 Numerical Type | Award: 2 | Penalty: 0 | Graph Theory

Let the vertex set of the graph G be $V(G) = \{1, 2, \ldots, 30\}$. Let the vertices $x, y \in V(G)$ be adjacent in G if the difference of the numbers x and y is at least 7. Determine $\chi(G)$, the chromatic number of G.

Your Answer: | Correct Answer: 5 | Not Attempted | Time taken: 00min 00sec | Discuss

Q #39 Multiple Choice Type | Award: 2 | Penalty: 0.67 | Compiler Design

Consider the following sets of $\mathrm{LR}(1)$ items in the states of an $\mathrm{LR}(1)$ parser.

State 0:
$[A \to \bullet a,\ b]$
$[A \to a \bullet,\ c]$
$[B \to a \bullet,\ b]$

State 2:
$[A \to \bullet a,\ c]$
$[A \to a \bullet,\ b]$
$[B \to a \bullet,\ a]$

State 1:
$[A \to \bullet a,\ a]$
$[A \to \bullet a,\ b]$
$[B \to a \bullet,\ b]$

State 3:
$[A \to \bullet a,\ b]$
$[B \to \bullet a,\ b]$

What happens when we merge states(which can be merged according to $\mathrm{LALR1}$ parser) in a $\mathrm{LALR}(1)$ parser?

A. A new reduce/reduce conflict introduced in the $\mathrm{LALR}(1)$ parser

B. A new shift/reduce conflict introduced in the $\mathrm{LALR}(1)$ parser

C. New reduce/reduce and shift/reduce conflicts introduced in the $\mathrm{LALR}(1)$ parser

D. No new conflicts introduced in the $\mathrm{LALR}(1)$ parser

Your Answer: | Correct Answer: A | Not Attempted | Time taken: 00min 00sec | Discuss

Q #40 Multiple Choice Type | Award: 2 | Penalty: 0.67 | Compiler Design

We have a scanner (lexical analyzer) which uses regular expressions to scan an input.

When using regular expressions to scan an input, we resolve conflicts by taking the largest possible match at any point. If two longest matches are of the same length then we give preference to token $\mathrm{T1}$ over token $\mathrm{T2}$.

Consider the string: aba aba aba bab baa aba ab (blank spaces used for readability only & are to be ignored) and its tokenization : $abaa,\ ba,\ ababa,\ bba,\ aa,\ ba,\ a,\ b$

Which of the following lexical analyzer specifications will produce this tokenization?

A. $\mathrm{T1} : (ab)^*a^+ \quad \mathrm{T2} : b^*a^*$

B. $\mathrm{T1} : (ab)^*a^* \quad \mathrm{T2} : b^*a$

C. $\mathrm{T1} : (ab)^*a^+ \quad \mathrm{T2} : b^*a$

D. $\mathrm{T1} : (ab)^+a^+ \quad \mathrm{T2} : b^*a^*$

Your Answer: | Correct Answer: N/A | Marks To All | Time taken: 00min 00sec | Discuss

Q #41 | Numerical Type | Award: 2 | Penalty: 0 | Compiler Design

A node p in a control flow graph(CFG) dominates a node q if every path from the entry node to q goes through p. We say that node p is a dominator of node q.

The dominator set of node q , DOM (q), is formed by all nodes that dominate q . By definition, each node dominates itself, therefore, $\mathrm{q} \in \mathrm{DOM}(\mathrm{q})$.

Consider the following control flow graph(CFG) of a program P in low level intermediate representation, which has 12 nodes.

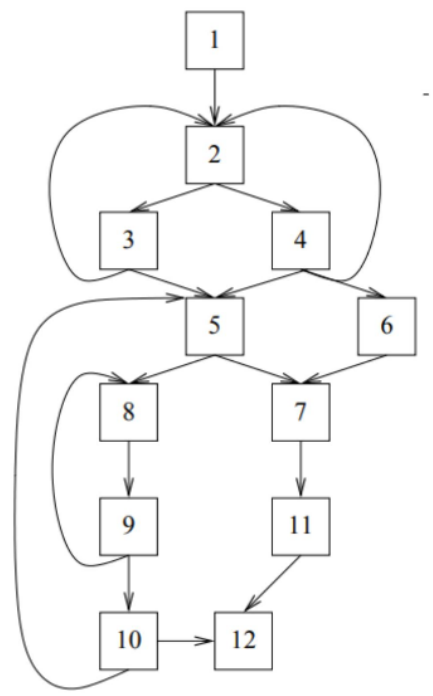

The number of nodes which have exactly three dominators, is equal to ? (For example, for node 2, $\mathrm{DOM}(2) = \{1, 2\}$)

Your Answer: | Correct Answer: 5 | Not Attempted | Time taken: 00min 00sec | Discuss

Q #42 | Numerical Type | Award: 2 | Penalty: 0 | CO & Architecture

Consider the following sequence of instructions.

Instruction Number	Instruction
I_1	SUBD F4, F4, F0
I_2	DIVD F3, F4, F0
I_3	ADDD F6, F3, F2
I_4	MULTD F1, F6, F7
I_5	ADDD F2, F5, F9
I_6	DIVD F5, F9, F2
I_7	ADDD F8, F1, F4

Assuming that you have as many functional units as you need, what is the total number of possible valid instruction execution sequences. (Assume a superscalar processor equipped with unlimited processing units to handle several instructions in parallel in each processing stage. With this arrangement, several instructions start execution in the same clock cycle, called multiple-issue. Superscalar processors can enable out-of-order execution in which instructions are fetched in the same order as they appear in the program, but may execute and complete out of order, subject to dependency constraints.)

Your Answer: | Correct Answer: 6 | Not Attempted | Time taken: 00min 00sec | Discuss

Q #43 | Multiple Choice Type | Award: 2 | Penalty: 0.67 | CO & Architecture

A processor has the following memory hierarchy: a cache with an access latency of $1\,\text{ns}$ and a main memory with an access latency of $100\,\text{ns}$. Access to main memory is performed only when the value is not found in the cache. What is the maximum acceptable cache miss rate such that the average memory access time is less than or equal to $2\,\text{ns}$?

A. 10%
B. 5%
C. 50%
D. 1%

Your Answer: | Correct Answer: D | Not Attempted | Time taken: 00min 00sec | Discuss

Q #44 | Multiple Select Type | Award: 2 | Penalty: 0 | Operating System

Two processes execute concurrently and attempt to implement mutual exclusion using two different locking mechanisms, namely **LockA** and **LockB**.

For **LockA**, a shared variable `turn` is used to decide whose turn it is. The variable is initially set to `turn` $= 0$.

For **LockB**, interrupts are disabled during the critical section. The system consists of a single processor unless stated otherwise.

The functions `disableInterrupts()` and `enableInterrupts()` respectively disable and enable interrupts on the given processor.

The code fragments executed by the processes are shown below. For simplicity, the code for Process P_0 and Process P_1 is written separately for **LockA**.

LockA – Process P_0	LockA – Process P_1	LockB – Process P_0 and P_1

/* turn initially $= 0$ */
`while (turn == 1);`
`/* Critical Section */`
`turn = 1;`
	/* turn initially $= 0$ */
	`while (turn == 0);`
	`/* Critical Section */`
	`turn = 0;`
		/* Code for both P_0 and P_1 */
		`disableInterrupts();`
		`/* Critical Section */`
		`enableInterrupts();`

Which of the following statements about the above locking mechanisms is/are **TRUE**?

A. LockA guarantees mutual exclusion and progress for both processes.

B. LockB guarantees mutual exclusion on both uniprocessors and multiprocessors.
C. LockA guarantees mutual exclusion but not progress.
D. LockB guarantees progress and mutual exclusion on a uniprocessor, but fails on multiprocessors and disables important interrupts.

Your Answer: | Correct Answer: C;D | Not Attempted | Time taken: 00min 00sec | Discuss

Q #45 | Multiple Select Type | Award: 2 | Penalty: 0 | Operating System

A process P generates the following virtual addresses. The corresponding physical addresses obtained after address translation are shown below. Both virtual and physical addresses are 32 bits long.

Virtual Address	Physical Address
0x0008 0AF0	0x0010 1AF0
0x0000 2224	0x0008 3224
0x0007 3234	0x0018 3234

In dynamic relocation, the Memory Management Unit (MMU) translates addresses using $p = v + r$, where v is the virtual address, p is the physical address, and r is the relocation value stored in the relocation register.

Which of the following statements are correct?

A. The address translations shown above could have been produced using dynamic relocation.

B. The MMU could have used paging with page size $64\ \mathrm{KB}\ (2^{16}\ \mathrm{bytes})$ to translate these addresses.

C. The MMU could have used paging with page size $4\ \mathrm{KB}\ (2^{12}\ \mathrm{bytes})$ to translate these addresses.

D. From the given address translations alone, it is not possible to determine whether the page table uses single-level or multi-level paging.

Your Answer: | Correct Answer: C;D | Not Attempted | Time taken: 00min 00sec | Discuss

Q #46 | Multiple Choice Type | Award: 2 | Penalty: 0.67 | Programming in C

What is the output of the following program?

```
int fun(char *x)
{
  char *ptr = x;
  while (*ptr != '\0') ptr++;
  return (ptr - x);
}

main()
{
  char str[30] = "This is GO Classes AIMT";
  printf("%d", fun(str));
}
```

A. 16

B. 23

C. 24

D. 30

Your Answer: | Correct Answer: B | Not Attempted | Time taken: 00min 00sec | Discuss

Q #47 | Numerical Type | Award: 2 | Penalty: 0 | Programming in C

Let two unsigned integer variables `m` and `n` hold the values `0` and `13643` respectively.

The following C code snippet is executed:

```
while (n > 0)
{
  m = (m * 10) + (n % 10);
  n = n / 10;
}
```

What will be the value of `m` after the execution of the above code?

Your Answer: | Correct Answer: 34631 | Not Attempted | Time taken: 00min 00sec | Discuss

Q #48 | Multiple Choice Type | Award: 2 | Penalty: 0.67 | Programming in C

Consider the following structure, where the field `rank` stores the class rank of a student.

```
struct student{
  int rank;
  struct student *ptr;
};
```

Fill in the blanks in the `printf` statement so that the program prints the class ranks of students **A** and **C**. Your answer **must not** directly use the identifiers `A` or `C`.

```
int main()
 {
  struct student A, B, C;
  A.rank = 1; B.rank = 5; C.rank = 10;
  A.ptr = &B; B.ptr = &C; C.ptr = &A;
  printf("%d,%d", ________ , ________ );
 }
```

Which of the following options correctly fills the blanks?

A. `((B.ptr)->ptr)->rank , (B.ptr)->rank`

B. `(B.ptr)->rank , ((B.ptr)->ptr)->rank`

C. `(B.ptr)->ptr->rank , B.rank`

D. `B.rank , (B.ptr)->rank`

Your Answer: | Correct Answer: A | Not Attempted | Time taken: 00min 00sec | Discuss

Q #49 | Multiple Choice Type | Award: 2 | Penalty: 0.67 | Data Structures

Consider the following function `baz()` that takes a pointer to the first node of a linked list.

```
void baz(link head)
{
  if (head == NULL)
    return;
  baz(head->next->next);
  printf("%d ", head->key);
}
```

The function is called with the following linked list:

$1 \rightarrow 2 \rightarrow 3 \rightarrow 4 \rightarrow 5 \rightarrow 6 \rightarrow \text{NULL}$

What will be printed when the function is executed?

A. 1 3 5

B. 2 4 6

C. 5 3 1

D. 6 4 2

Your Answer: | Correct Answer: C | Not Attempted | Time taken: 00min 00sec | Discuss

Q #50 | Multiple Choice Type | Award: 2 | Penalty: 0.67 | Algorithms

Given two lists A and B, each containing n integers, we want to find a one-to-one matching between elements of A and elements of B such that the total cost

$$\sum |a-b|$$

over all matched pairs (a, b) is minimized.

For example, if $A = \{4, -1, 8, 5\}$ and $B = \{7, 9, 10, 3\}$, one possible matching is $(-1, 9), (4, 7), (5, 3), (8, 10)$, which gives a total cost of $|-1-9| + |4-7| + |5-3| + |8-10| = 17$.

Which of the following algorithms correctly computes a minimum-cost matching between A and B in $O(n \log n)$ time?

A. For each element of A, greedily match it with the closest unused element of B.

B. Sort both lists A and B, and match the k-th smallest element of A with the k-th smallest element of B.

C. Try all possible matchings between A and B and choose the one with minimum total cost.

D. Construct a complete bipartite graph between A and B with edge weights $|a-b|$, and run Dijkstra's algorithm.

Your Answer: | Correct Answer: B | Not Attempted | Time taken: 00min 00sec | Discuss

Q #51 | Multiple Select Type | Award: 2 | Penalty: 0 | Algorithms

Consider the following statements related to BFS and DFS in graphs.

Select **all** statements that are correct.

A. For a directed graph, the absence of back edges with respect to a BFS tree implies that the graph is acyclic.

B. The depth of any DFS tree rooted at a vertex is at least as much as the depth of any BFS tree rooted at the same vertex.

C. In an undirected graph, there is no edge that jumps more than one level of any BFS tree of the graph.

D. In an unweighted graph where the distance between any two vertices is at most T, any BFS tree has depth at most T, but a DFS tree might have larger depth.

Your Answer: | Correct Answer: B;C;D | Not Attempted | Time taken: 00min 00sec | Discuss

Q #52 | Multiple Choice Type | Award: 2 | Penalty: 0.67 | Probability

The box 1 contains chips numbered $3, 6, 9, 12$ and 15. The box 2 contains chips numbered $6, 11, 16, 21$ and 26. Two chips, one from each box, are drawn at random. The numbers written on these chips are multiplied. The probability for the product to be an even number is

A. $6/25$

B. $2/5$

C. $3/5$

D. $19/25$

Your Answer: | Correct Answer: D | Not Attempted | Time taken: 00min 00sec | Discuss

Q #53 | Multiple Choice Type | Award: 2 | Penalty: 0.67 | Calculus

Let $f(x)$ be a function continuous on $[2, 7]$ and differentiable on $(2, 7)$ where we have that $f(2) = 1, f(4) = 7, f(5) = 5, f(7) = 1$. Which of the following is **not necessarily** a value of $f'(x)$ for some x in $(2, 7)$?

A. 0

B. 6

C. 3

D. $\frac{4}{3}$.

Your Answer: | Correct Answer: B | Not Attempted | Time taken: 00min 00sec | Discuss

Q #54 | Numerical Type | Award: 2 | Penalty: 0 | Computer Networks

Consider a source A that uses TCP to transfer a file of size $8\,\mathrm{KB}$ to destination B. Each data packet carries a payload of $1\,\mathrm{KB}$. During the transfer, exactly two losses occur:

- the 4th data packet is lost, and
- the acknowledgement of the 6th data packet is lost.

Assume the following:

- Retransmission timeout (RTO) $= 4 \times \mathrm{RTT}$
- Fast retransmission and fast recovery are triggered after receiving three duplicate acknowledgements
- Connection setup time, processing time, and transmission time are ignored
- Transfer time is measured from the instant the first data packet is transmitted by A to the instant the acknowledgement of the last data packet is received by A

How many RTTs are required to complete the entire file transfer?

Your Answer: | Correct Answer: 8 | Not Attempted | Time taken: 00min 00sec | Discuss

Q #55 | Multiple Choice Type | Award: 2 | Penalty: 0.67 | Computer Networks

Consider the network shown in the following diagram:

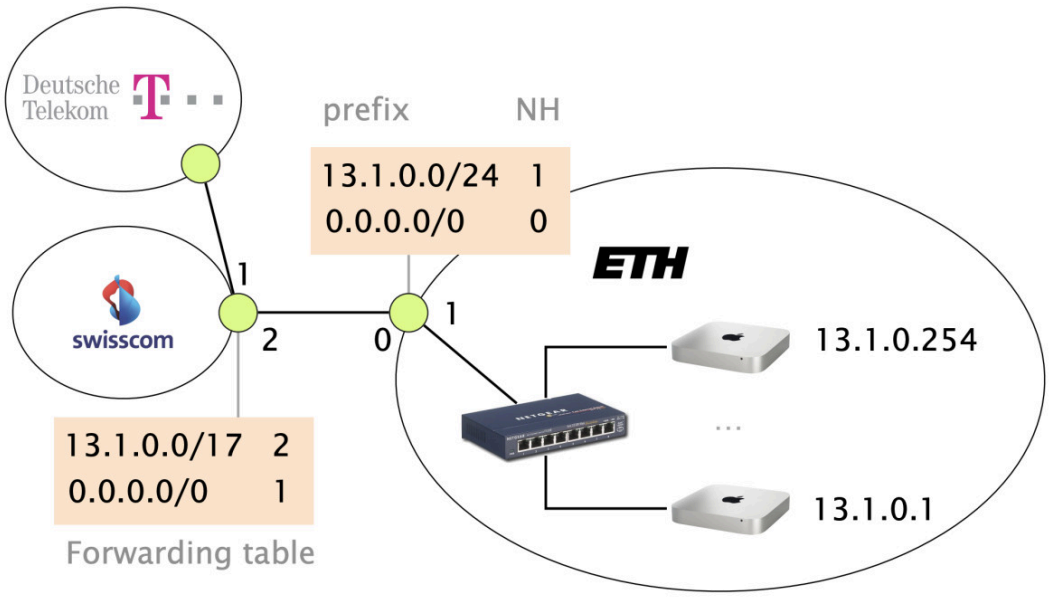

Consider this simple network configuration between ETH and Swisscom. Assume that ETH owns a large IP prefix $13.1.0.0/17$, but only uses $13.1.0.0/24$ to address its internal hosts. For simplicity, assume that ETH and Swisscom configure their forwarding tables statically and rely on the use of a default route $(0.0.0.0/0)$.

Suppose Swisscom receives a packet for $13.1.66.1$ from Deutsche Telekom. What is the path taken by this IP packet?

A. Swisscom/1 → Swisscom/2 → ETH/0 → ETH/1

B. Swisscom/1 → Swisscom/2 → ETH/0 → Deutsche Telekom

C. Swisscom/1 → Swisscom/2 → ETH/0 (packet is delivered to an ETH host)

D. Swisscom/1 → Swisscom/2 → ETH/0 → Swisscom/2 → ETH/0 → ...

Your Answer: | Correct Answer: D | Not Attempted | Time taken: 00min 00sec | Discuss

Copyright & Stuff